PRODUCT SHEET

Indoor Lockable Showcase With Sliding Doors Slim With Safety Cor

SCSLR8xA4

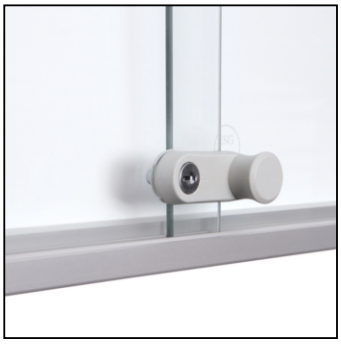

- **4 mm sliding security glass doors (ESG)**
- **With round ABS plastic corners for safety**
- **For indoor use B1 certified**

PRODUCT SHEET

Indoor Lockable Showcase With Sliding Doors Slim With Safety Cor

SCSLR8xA4

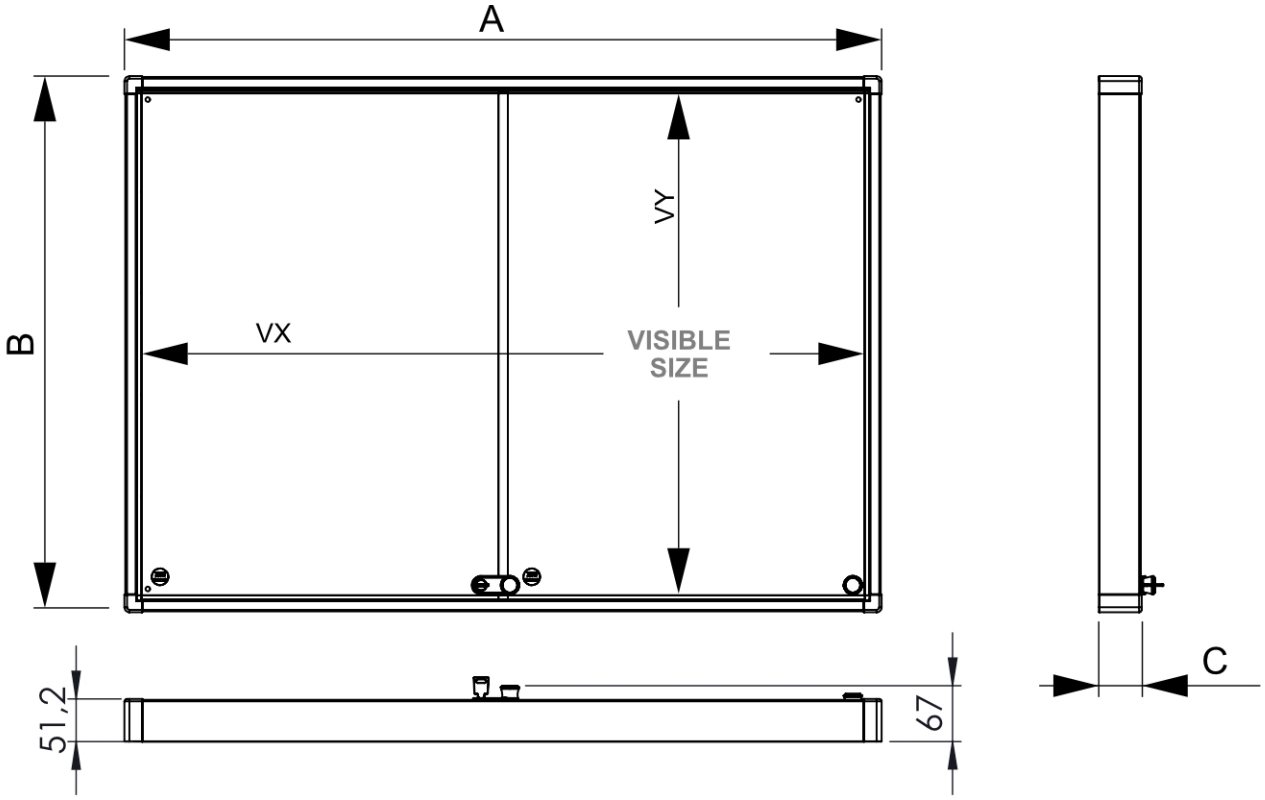

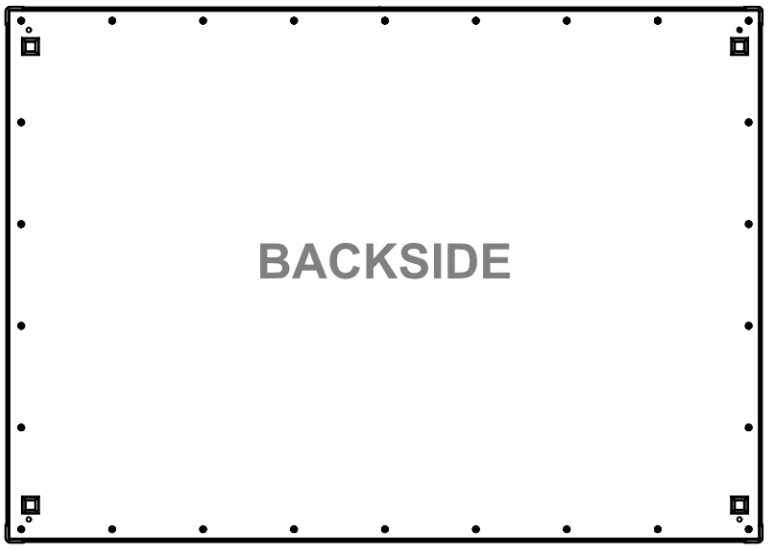

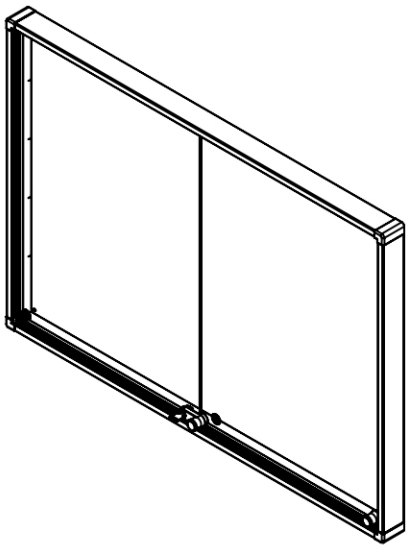

PRODUCT SHEET

Indoor Lockable Showcase With Sliding Doors Slim With Safety Cor

SCSLR8xA4

GENERAL INFO

SKU	Sizes (mm) (A x B x C)	Format (mm)	Visible size (mm) (VXxVY)	Hole spacing (mm) (XxY)
SCSLR8xA4	906 x 641 x 50	8 x A4	880 x 615	-

Orientation	Weight (kg)
Vertical	11,04

ELECTRICAL INFORMATION

Illumination	Lighting colour (K)	Luminosity (cd)	Light intensity (lx)	Wattage (W)
No	-	-	-	-

PACKAGING INFORMATION

Packaging unit 1 (mm)	Packaging unit 2 (mm)	Packaging unit 3 (mm)
1002 x 737 x 102	-	-

Palette number of pieces	Palette weight (kg)	Palette type
17	235	EUR

ADDITIONAL INFORMATION

Product certifications	EAN
DIN4102B1	8596052182594